EASYTHERM SERIES

User manual for the Easytherm 1, 2, 3.5, 15 and 30 bearing induction heaters. Read this manual carefully before installation and operation.

Valid for Easytherm 1 / 2 / 3.5 / 15 / 30 · v2.1

BEARING INDUCTION HEATER · INDUKTIONS-ANWÄRMGERÄT FÜR LAGER · CHAUFFAGE PAR INDUCTION DE ROULEMENTS · INDUCTIEVERHITTER VOOR LAGERS · CALENTADOR POR INDUCCIÓN DE RODAMIENTO



NOTE

Check delivery for possible damage caused by transport without delay. Should damage be detected, please inform carriers immediately. As our products are subject to continuous improvement, we reserve the right to make changes.

WEB

tminductionheating.com

MAIL

info@tminductionheating.com

TEL

+31 (0) 341 434454

ADDRESS

TM Induction Heating
Nobelstraat 14
3846 CG Harderwijk
The Netherlands

COMPANY

T & M Techniek BV
BTW NL800643136B01
KvK 08054481

QUALITY

ISO 9001:2015 · ID 9000001589
www.tuv.com

Contents

1 Induction Heating	
2 Safety Instructions	Safety precautions · Safety features
3 Installation & Workpiece Set-up	Scope of delivery · Installation · Workpiece set-up · Positioning the magnetic temperature sensor
4 Operation	Temperature Mode · Time Mode
5 Maintenance	
6 Troubleshooting	Adjusting the yoke · Errors
7 Technical Data	Electrical · Size & weight · Dimensions · Bearing size · Yokes · Electrical drawings
8 Statement of Conformity	Declaration of conformity

1 Induction Heating

Easytherm induction heaters are designed to heat rolling bearings. Our range of standard heaters are designed to heat the workpiece to a maximum temperature of 240°C (464°F). The heater is designed to be used in an industrial environment with an ambient temperature of 0°C to 40°C (32°F to 104°F) and an atmospheric humidity between 5% and 90%, non-condensing. The induction heater is intended for indoor use only.

> Bearings generally should only be heated to a maximum temperature of 120°C (248°F). Do not use induction heaters for bearings or workpieces with dimensions outside the ranges specified in this manual. Do not switch off the heater with the main switch while heating cycle is running.

2 Safety Instructions

The operating instructions should always be followed when using an induction heater. TM Induction Heating shall not be held liable for damages caused by improper handling or by use which does not comply with the designated purpose. Prerequisites for the operator: He/she must be authorised for use of the heater and must be familiar with the safety precautions. The operator should have an understanding of the contents of this user manual, and be familiar with safe workshop practices. Follow the user manual at all times.

In order to prevent danger or damage to the induction heater or workpiece, follow these guidelines:

- All repairs must be carried out by an official TM Induction Heating distributor.
- Use original spare parts only.
- Protect the heater from water or very high humidity. Do not store (or use) the heater in humid environments. The heater is designed for indoor use only. Place heater on a stable, horizontal surface. Do not place the heater on a metal surface.
- Protect the heater core and yokes against corrosion, damage and deformation.
- Always place the temperature sensor on the workpiece to check the heating cycle. When heating an object using Time Mode, the heating cycle must be checked using an external temperature meter.
- Ensure that the induction heater operates at the correct supply voltage. If the heater is not supplied with a (correct) plug, changes should only be made by a suitably qualified electrician.
- Use proper handling equipment, appropriate for the weight of the workpiece and/or yoke. Never support components with a metal cable or have any hanging in the proximity of the magnetic field. Extremely high currents can flow through the cable causing it to heat up quickly, resulting in a risk of burning.

2.1 SAFETY PRECAUTIONS

- Since a magnetic field [4&5] is generated by the induction heater, people wearing a pacemaker [1] or other implant device [2] should not work or be in the immediate vicinity of the device. Other sensitive equipment such as wrist watches, magnetic carriers, electronic circuits, etc. [3] might also be affected. The safety distance is 0.5 meters (19”).
- Use protective gloves as protection against burns to hands. The gloves delivered are suitable for use up to temperatures of 240°C (464°F).
- Hot surface, avoid contact [6].
- Do not operate an induction heater in areas where there is risk of explosion.
- Wear safety shoes [8].
- Do not place any metal objects (other than the workpiece) near the yokes and poles. Keep a minimum distance of 1 meter (38”) to surrounding objects.
- Do not heat objects containing oil, grease or similar substances. Prevent possible generation of fumes and smoke. Do not inhale fumes or smoke from heated parts. Use only in well ventilated areas.
- Do not move or lift heater directly after a completed heating cycle.
- Do not touch the heater core and/or workpiece during heating cycle.



1 Prohibited for persons with pacemakers or implanted defibrillators.



2 Prohibited for persons with metallic implants.



3 Carrying of metallic parts or watches prohibited.



4 Warning of magnetic field during operation.



5 Warning of radio frequency.



6 Warning of hot surface.



7 Wear safety gloves.



8 Wear safety shoes.

2.2 SAFETY FEATURES

Should an error occur during the heating process, the induction heater will automatically stop. The corresponding error will be displayed on screen. More information about the types of errors can be found in chapter 6 - **TROUBLESHOOTING**.

An induction heater produces an electromagnetic field within a coil to transfer energy to a workpiece. The table below shows values of the flux density in microTesla (µT). These measurements can be used as a guide conforming to local regulations regarding the maximum time exposure to magnetic fields. Different configurations may give different values.

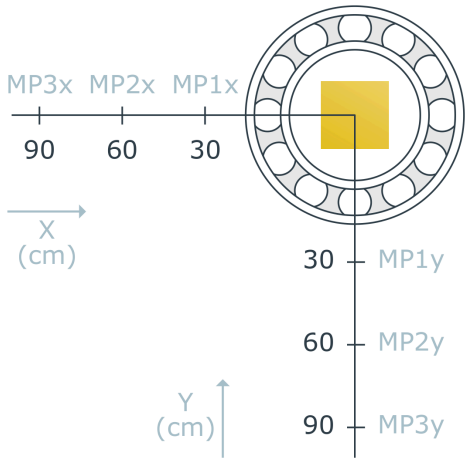

Measurement positions MP1–MP3 along the X and Y axis, distances in cm from the yoke.

EASYTHERM	1	2	3.5	15	30
Measurement position (cm)			$B\text{-field}_{total}$ (µT)		
MP1x (30 cm)	80	110	160	600	400
MP2x (60 cm)	-	-	-	90	160
MP3x (90 cm)	-	-	-	-	80
MP1y (30 cm)	90	160	270	270	400
MP2y (60 cm)	-	-	-	100	160
MP3y (90 cm)	-	-	-	-	90

Total 50Hz RMS field for magnetic measurement results. Max. magnetic flux in safe exposure area, according to the German BG 11 Regulations is 423 µT.

3 Installation & Workpiece Set-up

3.1 SCOPE OF DELIVERY

1. Easytherm 1 / 2 / 3.5 / 15 / 30
2. Yoke(s)
3. Magnetic temperature sensor
4. Support rails
5. Heat-resistant gloves
6. User Manual

3.2 INSTALLATION

Remove all packing material and place the induction heater on a non-ferrous, stable, flat surface. Ensure that supply voltage, current and mains frequency meet the specifications. These can be found on the type plate at the back of the induction heater.

Each induction heater is provided with a plug, but there are a large number of plug types. Should the plug not fit your power supply, a suitable plug must be affixed by a qualified electrician. Voltages may differ for customized heaters.

VOLTAGE	PHASE	NEUTRAL	GROUND
110–230V	Brown Black (USA)	Blue White (USA)	Green/Yellow

VOLTAGE	PHASE X / L1	PHASE Y / L2	GROUND
400–440V	Brown Black (USA)	Blue Black (USA)	Green/Yellow
460–575V	Brown Black (USA)	Blue Black (USA)	Green/Yellow

Mains connection: wire colours per voltage range.

Insert the plug into a shockproof wall socket and then connect the heater to mains electricity. Turn main switch from 0 to 1. The LED display will light up and the induction heater is now ready for use.

3.3 WORKPIECE SET-UP

> Use appropriate hoisting equipment for heavy components and yokes. Manual lifting of heavy objects is a common cause of injury. Wear safety shoes during these procedures.

- The weight of the workpiece should not exceed the maximum weight as shown in the heater specifications in chapter 7 - **TECHNICAL DATA**. Exceeding these limits may result in catastrophic equipment failure leading to personal injury.
- Ensure that the mains cable cannot come into contact with the work piece. Damage to the cable may result in electrocution.
- Never support components with a metal cable or have any hanging in the proximity of the magnetic field. Extremely high currents can flow through the cable causing it to heat up quickly, resulting in a risk of burning.

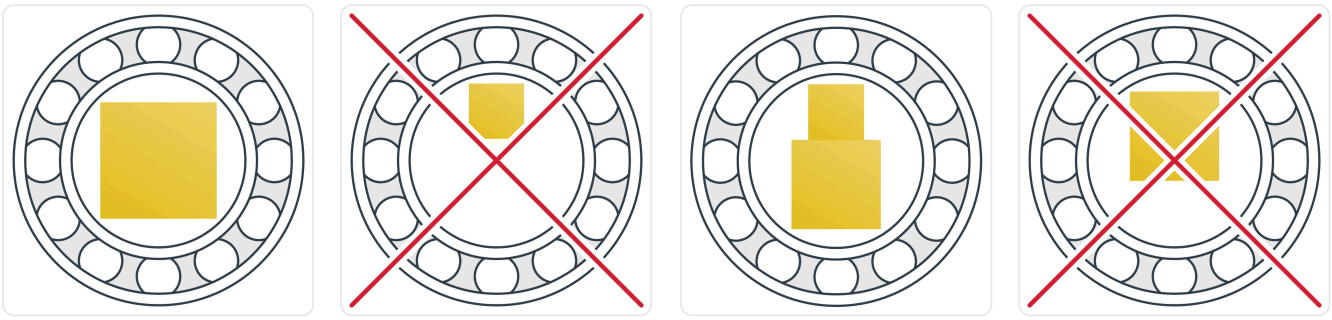

Yoke and workpiece positioning: correct (left) and incorrect (crossed out), vertical and horizontal.

- Choose largest possible yoke which fits the diameter of the workpiece. Position the workpiece onto the yoke and place the yoke with the machine milled surface on the poles of the heater core.
- When heating a workpiece horizontally, always use the largest yoke available for the best results.
- Always make sure that the workpiece avoids direct contact with the housing of the heater.
- When a heating cycle is completed, always wear heat-resistant gloves. The maximum temperature of the workpiece on a standard induction heater is 240°C (464°F).
- Always treat yokes carefully. Falling, bumping, etc. can damage the yoke and/or cause personal injury. Always store the yoke safely immediately after use.
- The heater can tilt when hanging a bearing on a yoke opened too far (>45°). The potential tilting point depends on bearing weight, opening angle of yoke and the position of the bearing (on the yoke). Using a heavier workpiece may cause the induction heater to tip over, causing personal injury and damage to the heater.



Tilting risk with a pivoting yoke opened too far.

3.4 POSITIONING THE MAGNETIC TEMPERATURE SENSOR

- Always use the magnetic temperature sensor (hereafter referred to as the ‘sensor’) for heating in Temperature Mode.
- Connect the sensor by inserting the plug into the socket at the front of the heater, with the red dot facing upwards.
- Place the sensor on the workpiece, close to the bore (see fig. 1). Make sure that the surface used for the sensor is free of grease and/or oil. To avoid overheating the workpiece, never place the sensor on the outer ring (see fig. 2).

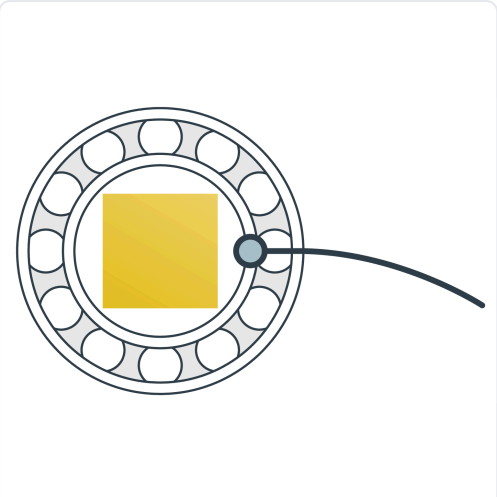

Fig. 1: Sensor placed close to the bore.

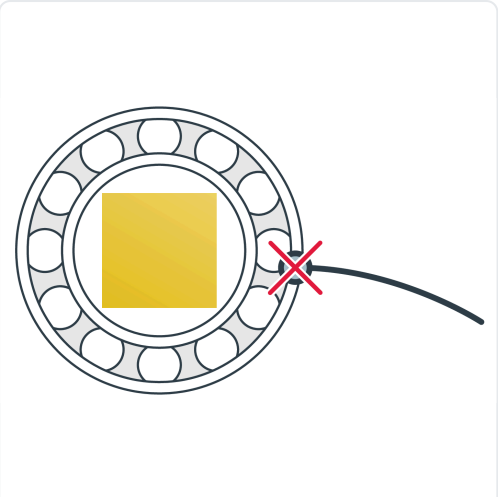

Fig. 2: Never place the sensor on the outer ring.

Treat the magnetic temperature sensor with care. It is a valuable part of the heater and can easily be damaged through careless handling. After use, we suggest that it is placed on the side of the vertical pole.

4 Operation

4.1 TEMPERATURE MODE

AVAILABLE ON EASYTHERM 1 / 2 / 3.5 / 15 / 30

When the operator switches the heater on, the LED display will show 110°C (230°F). With the buttons labeled UP and DOWN you can increase or decrease the temperature. The temperature range for Easytherm is from 0°C (32°F) to 240°C (484°F).

Select the preferred temperature and press the button labeled START/STOP to start the heating process. The LED display will now show the measured temperature of the workpiece.

Once the selected temperature is reached, an acoustic signal can be heard and the LED display will flash. Press the START/STOP-button to stop the heating cycle and remove the temperature sensor from the workpiece. Remove the workpiece from the induction heater. During the heating cycle, the progress can be stopped at any moment by pressing the START/STOP-button.



Control panel in Temperature Mode: 3-digit LED display, UP, START/STOP and DOWN.

Feature: Temperature hold

After heating cycle completion: As soon as the temperature drops 5°C/°F, the heating cycle will automatically restart and heat until the selected temperature is reached (again). This process will repeat for a maximum of 5 times. Press the START/STOP-button to stop the heating cycle.

4.2 TIME MODE

AVAILABLE ON EASYTHERM 3.5 / 15 / 30

Time Mode should only be used in production areas where the workpiece to be heated is always of the same specifications. To determine the settings for Time Mode, the operator must heat the part on Temperature Mode first. During the heating cycle measure the time using a stopwatch. The measured time can now be used as input for Time Mode. When heating an object using Time Mode, the heating cycle must be checked using an external temperature meter.

When the operator switches the heater on, the display will show 110°C (230°F). Press the Time Mode-button and the LED display will show 00.00. Select the preferred time duration and press the button labeled START/STOP to start the heating process. The LED display will now show the time remaining.

Once the selected time duration has passed the heating cycle will automatically stop, an acoustic signal can be heard, and the LED display will flash. Press the START/STOP-button to stop the acoustic signal. Remove the workpiece from the induction heater. During the heating cycle, the progress can be stopped at any moment by pressing the START/STOP-button.

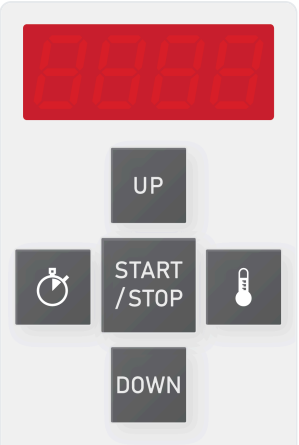

Control panel with Time Mode: 4-digit LED display, Time Mode button, UP, START/STOP and DOWN.

> Our standard temperature sensors are suitable for operation up to a maximum temperature of 240°C (464°F). The connection between magnet and temperature sensor will break above the maximum temperature.

5 Maintenance

- Store in a dry, frost-proof area, free from humidity.
- Keep clean with a soft, dry cloth.
- Keep the touchpad clean for optimal visibility of the user interface.
- Keep the contact parts of the heater core poles greased. Grease regularly with an acid-free grease for optimal contact and to avoid corrosion (in the case of heaters with a pivoting yoke, also grease the vertical pin regularly).
- CRITICAL SPARE PART - Magnetic temperature sensor. Always use original spare parts, we can not guarantee a proper functioning using other parts.

> Proper maintenance and handling practices are critical. Failure to follow installation and maintenance instructions can result in equipment failure, creating a risk of serious bodily harm.

6 Troubleshooting

If a loud vibrating noise is heard:

- Stop the heating cycle by pressing the start/stop button.
- Are the contact surfaces clean and greased sufficiently?
- Is the yoke 100% in contact with the surface? If this is not the case, adjust the yoke with instructions below.

6.1 ADJUSTING THE YOKE

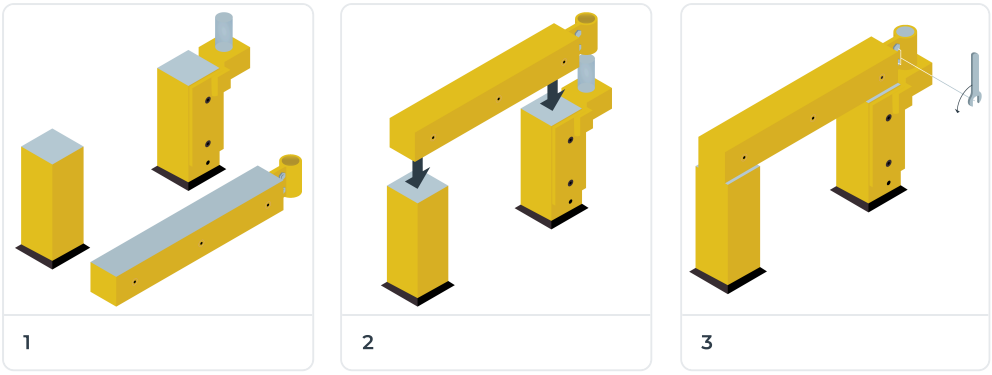

Adjusting a pivoting yoke, steps 1 to 3.

1. Check if the machine milled surface is smooth.
2. Place yoke or pivoting yoke on the heater.
3. Unscrew the bolts between pivoting point and yoke a quarter turn.
4. Turn on the heater and start a heating cycle. *A bearing is not required.*
5. Fasten the bolts again during the heating cycle.
6. Stop the heating cycle and the yokes are now adjusted.

6.2 ERRORS

CODE	EVENT	POSSIBLE CAUSE / ACTION
E01	Magnetic temperature sensor is not detected.	Environment temp. is too low (<0°C) / Change location of induction heater.
		The sensor is not plugged in / Plug in the temperature sensor.
		The sensor is plugged in up side down / Turn the temperature sensor plug around.
		The cable of the sensor is broken / Replace the temperature sensor.
		The internal wiring is disconnected / Contact your local distributor.
E02 **E03**	The temperature increase is insufficient. The increase was less than 1°C per minute.	The sensor is damaged / Replace the temperature sensor.
		The bearing is too large / Check the max allowed OD.
		The bearing is too heavy / Check the max allowed weight.
E10 **E12**	Fatal hardware error.	Isolate the induction heater and contact your local distributor.

If in any doubt, isolate the induction heater and contact your local distributor. You can find the contact details for your nearest distributor on **www.tminductionheating.com/distributors**.

7 Technical Data

7.1 ELECTRICAL

EASYTHERM	1	2	3.5	15	30
Voltage (V)	115 / 230	115 / 230	115 / 230	400 / 460	400 / 460
Max. current (A)	10	13	16	20	32
Frequency Mains (Hz)	50 / 60	50 / 60	50 / 60	50 / 60	50 / 60

Check the typeplate on the induction heater for the correct specifications.

7.2 SIZE & WEIGHT

EASYTHERM	1	2	3.5	15	30
Footprint (mm)	230 x 200	200 x 340	415 x 260	505 x 260	807 x 307
Weight excl. yoke (kg)	9	14	29	62	119

7.3 DIMENSIONS

EASYTHERM	1	2	3.5	15	30
Dimension A	65	120	180	210	330
Dimension B [1]	115	120	180	240	300
Dimension C	99	104	155	207	265
Dimension D	75	130	140	210	250
Dimension E	170	290	370	490	660

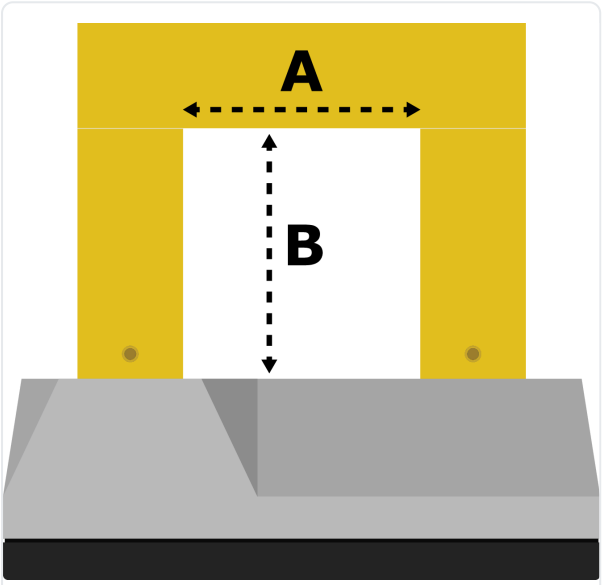

Dimensions A and B, without support rails.

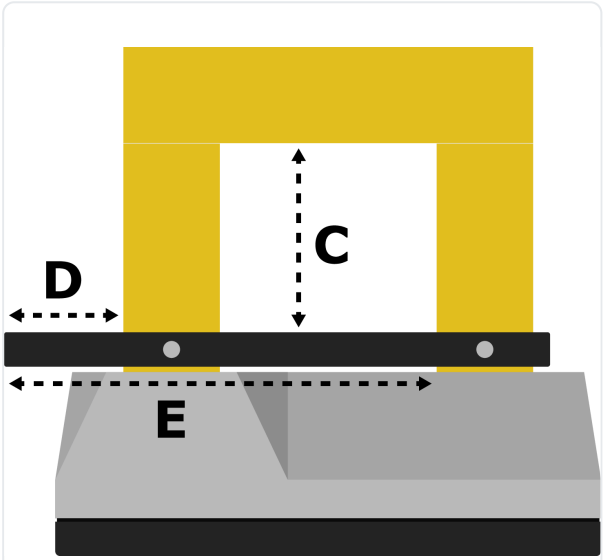

Dimensions C, D and E, with support rails.

7.4 BEARING SIZE

EASYTHERM	1	2	3.5	15	30
Max. OD ø [2]	170	290	370	490	660
Min. ID ø [3]	10	10	10	20	30
Min. ID ø horizontal	44	66	80	108	125
Max. Width vertical	60	115	175	200	315
Max. Width horizontal [2]	94	99	150	197	255
Max. Weight (kg)	10	40	70	150	300

The dimensions shown above are theoretical. In practice there are multiple factors (e.g. workpiece weight, material and placement) that influence the possibility and/or the time needed to heat the workpiece properly.

[1] No support rails [2] With support rails [3] Yoke 7 x 7 not included in standard package

7.5 YOKES

SIZE	MIN. ID	1	2	3.5	15	30
7 x 7	ø ≥10	○	○	○	✕	✕
10 x 10	Ø ≥15	✓	○	○	✕	✕
14 x 14	Ø ≥20	✕	✓	✓	○	✕
20 x 20	Ø ≥30	✓	✕	✕	○	○
25 x 24	Ø ≥35	✕	✓	✓	○	✕
30 x 26	Ø ≥40	✓	○	✕	○	○
40 x 38	Ø ≥55	✕	✓	○	✓	○
50 x 48	Ø ≥70	✕	✕	✓	○	○
60 x 60	Ø ≥85	✕	✕	✕	○	○
70 x 70	Ø ≥100	✕	✕	✕	✓	○
80 x 80	Ø ≥115	✕	✕	✕	✕	✓

✓ Included ○ Optional ✕ Not available

7.6 ELECTRICAL DRAWINGS

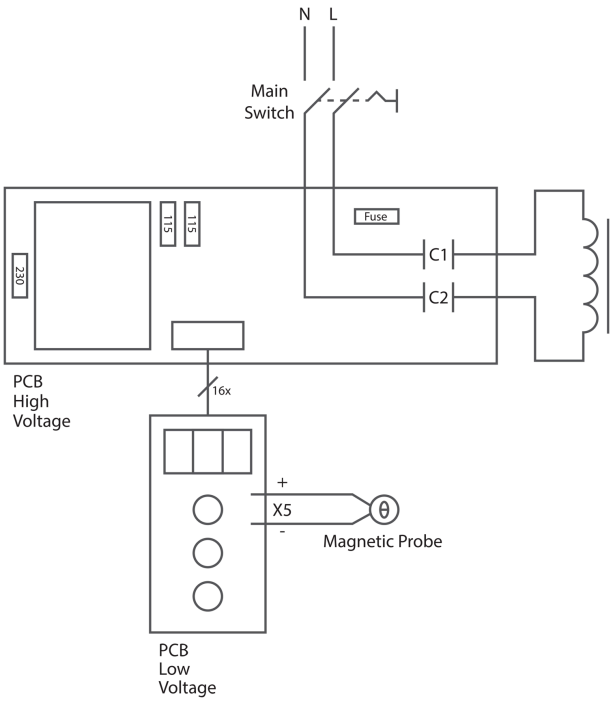

Easytherm 1 / 2

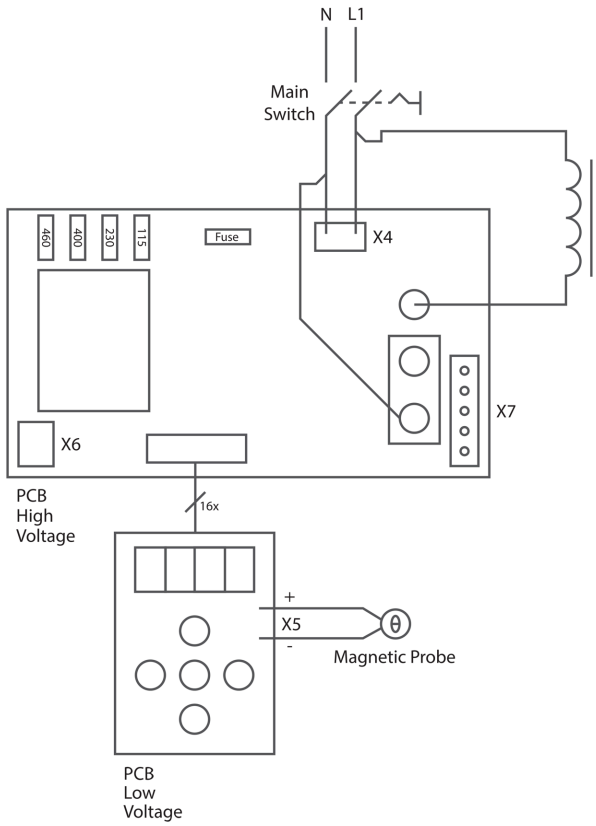

Easytherm 3.5

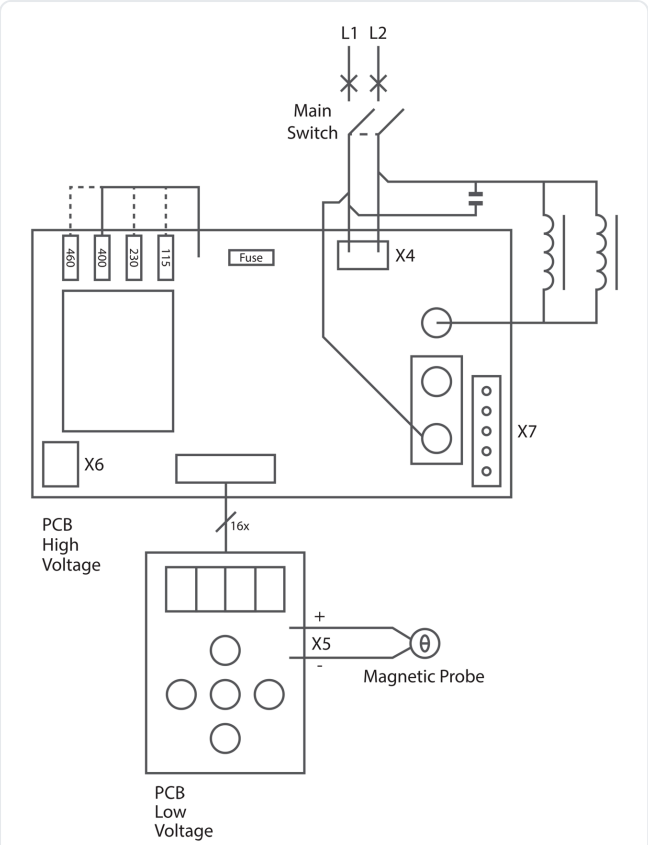

Easytherm 15

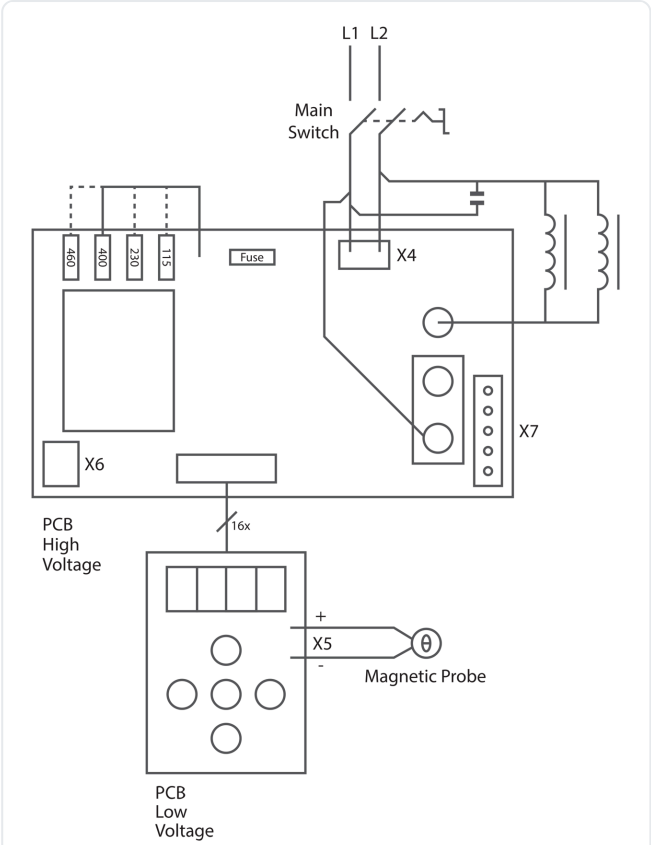

Easytherm 30

8 Statement of Conformity

TM Induction Heating consistently provides products that meets customer and applicable statutory and regulatory requirements. ISO 9001:2015 specifies the requirements for a quality management system.

Management System
ISO 9001:2015
www.tuv.com
ID 9000001589

A properly issued Declaration of Conformity has been established in order to ensure the quality of Easytherm induction heaters. This declaration indicates that the product meets the requirements of the directives which are applicable. The Easytherm induction heaters are manufactured in accordance with European regulations; CE compliant. As CE marking is a mandatory conformity marking for products sold within the European Economic Area these declarations do not cover any regions outside Europe. However, these declarations do ensure the quality of TM Induction Heating products.

DECLARATION OF CONFORMITY

Manufacturer	TM Induction Heating
Address	Nobelstraat 14, 3846 CG Harderwijk, The Netherlands

We hereby declare that the supplied version of

Product	Induction heater
Type	Easytherm 1 / 2 / 3.5 / 15 / 30

This product complies with technical standards specifications as defined by Machine directive 2006/42/EC, low voltage directive 2014/35/EU and EMC directive 2014/30/EU.
In conjunction with the following harmonized standards and where appropriate other technical standards and specifications:

Risk Assessment	EN-ISO 12100:2010
Design & Manufacture	EN-IEC 61000-4-6:2007/A1:2011 · EN-IEC 60204-1:2006/C11:2010 · NEN 3140/A1:2015

NAME	FUNCTION	SIGNATURE
Mr. E. van Dijk	General Manager	